PROTONET

USER INSTRUCTIONS

Dear visionaries,

You are now operating your own server and regaining control over your data and your independence. This is precisely what Protonet's vision is and what we are here for.

By purchasing your personal server you are supporting our idea, local production and our software and hardware engineering. This is awesome and we thank you for it! The step you have taken is an important one towards freeing the Internet and making it versatile and fair again.

To enable you to enjoy this newly acquired independence without any problems, we have a few instructions for the set up and maintenance of your personal server. We also want to use this opportunity to explain some fundamental thoughts regarding the design and use of Protonet.

The future belongs to you!

With innovative regards,

Ali Jelveh (CRO)

Christopher Blum (CTO)

Thomas Reimers (CMO)

David Burkhardt (Productdesigner)

CONTENTS PAGE

PACKAGE CONTENT

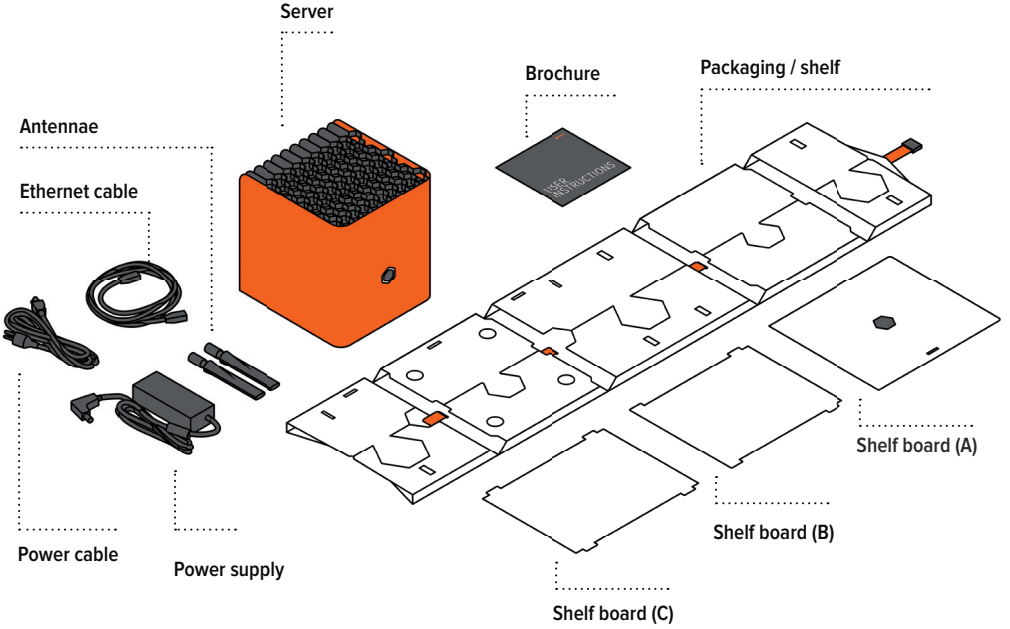

SET UP

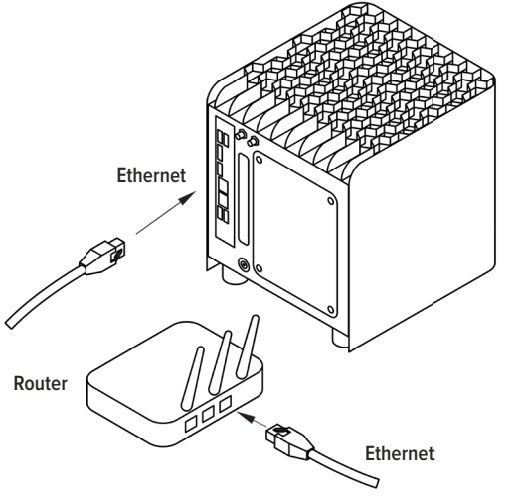

Step 1.

Connect the Ethernet cables
(Ethernet, router)

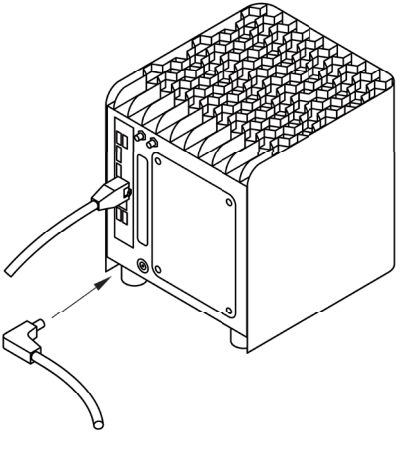

Step 2.

Connect to power

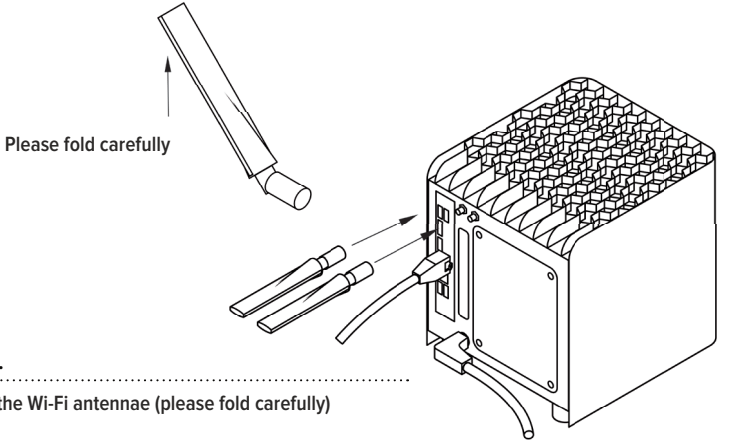

Step 3.

Mount the Wi-Fi antennae (please fold carefully)

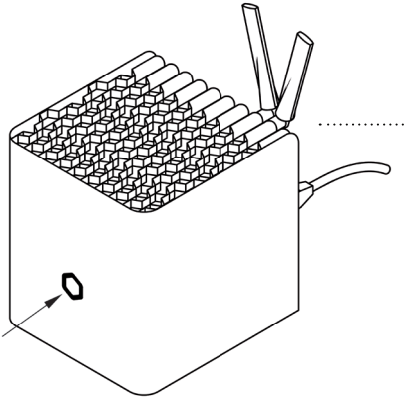

Step 4.

Switch the server on,
wait five minutes

LET’S GO!

STEP 5.
Connect your computer to the Wi-Fi **“Protonet”**
and use the password **Changeme!123**

STEP 6.
Start your web browser and enter the following web address:
http://10.42.0.1/

STEP 7.
Log in using the username **“admin”**. Password: **Changeme!123**

STEP 8.
Inform your colleagues, friends and other users and you can start.

If your Carla or Carlita is still unable to connect to the Internet after the initial set up process, the problem is most probably related to your firewall settings.

SUPPORT

Should any questions or problems arise up to this point, in the support community you will find previously answered questions and can also exchange information with other users. For individual issues you can create a support ticket through the contact sheet.

Our support team provides regular training sessions and introductory workshops, which you are warmly invited to take part in. Once you have registered in our support community at **https://support.protonet.info** you will be able to find the dates of those sessions.

In case of an emergency our support team can be contacted by telephone on weekdays from 9.00am to 5.00pm. The number can be found on our website.

PACKAGING INSTRUCTIONS

Environmentally friendly

Cardboard

Upcycling

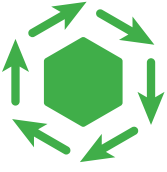

Recycling

The Protonet packaging mainly consists of light, flexible yet stable corrugated cardboard, making unsustainable styrofoam and foil redundant. The Protonet server is immediately visible through the front and rear gaps in the packaging, making any print on the cardboard unnecessary. The packaging is marked with the **“Protonet”** logo only. The individual letters, which are applied by hand, are made of self-adhesive film. A special characteristic is the **“upcycling function”** of the packaging. Once the personal server has been unpacked, within seconds it can be transformed into a storage space with two shelves and a drawer, which means the packaging does not end up in the trash.

Lay the packaging flat down

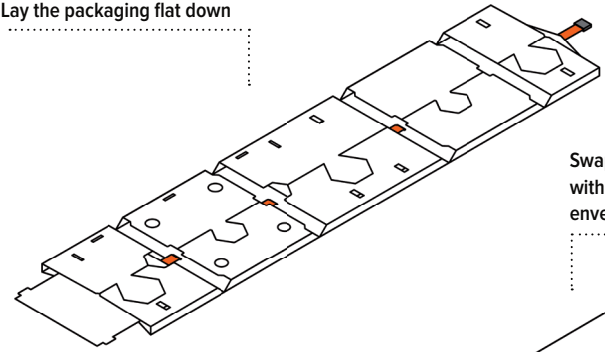

Swap the upper shelf (B) with the user instructions envelope (A)

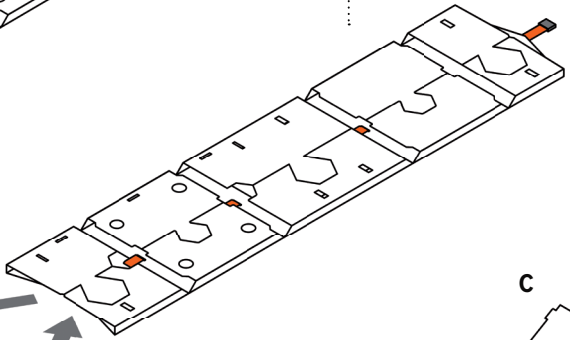

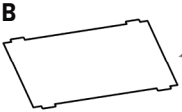

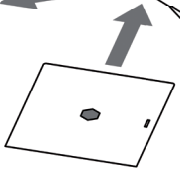

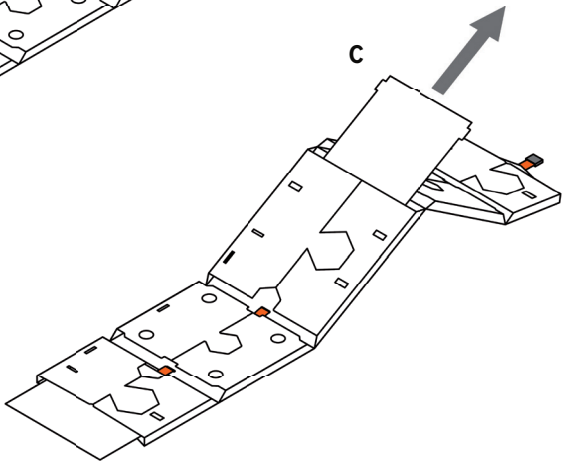

Slightly fold the side and remove the lower shelf (C) from the side wall

Fold shelf (C) at 90°...

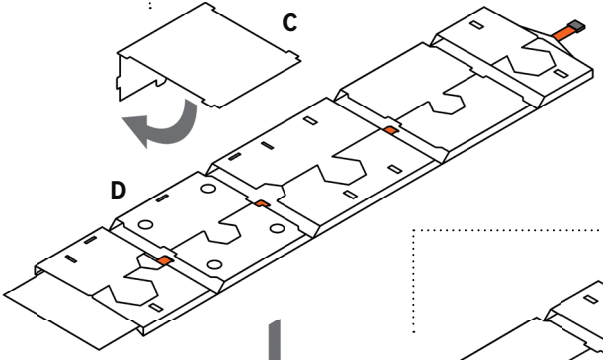

... slide it into the slit of the packaging

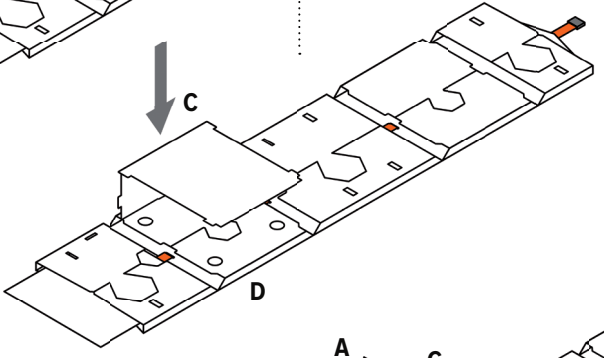

Fold the left side of the packaging up
and insert the lower shelf (C) on the side

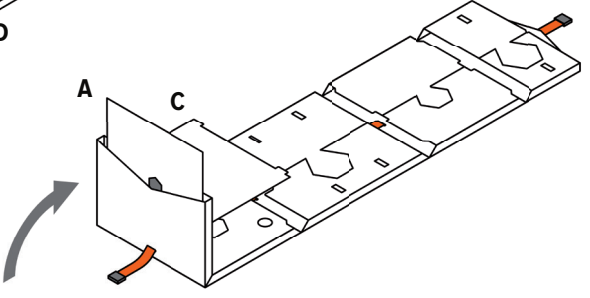

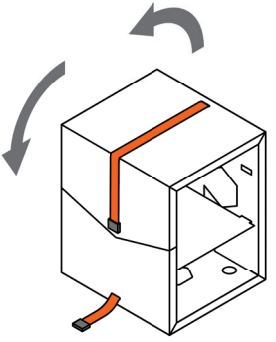

Fold the other side up too and insert the other side of the lower shelf (C), as on the left side

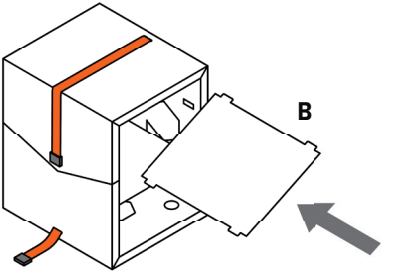

Take the upper shelf (B) and slide at an angle to insert it on one side into the slit

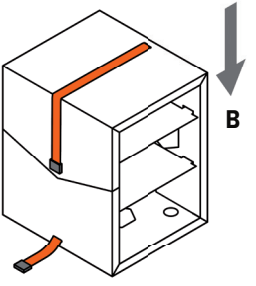

Then gently press down on the other side of shelf (B) until it fits into the other slit

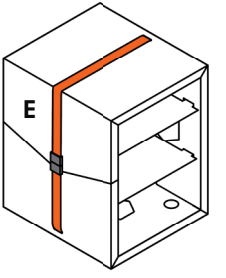

Tighten the belt (E)

MATERIAL

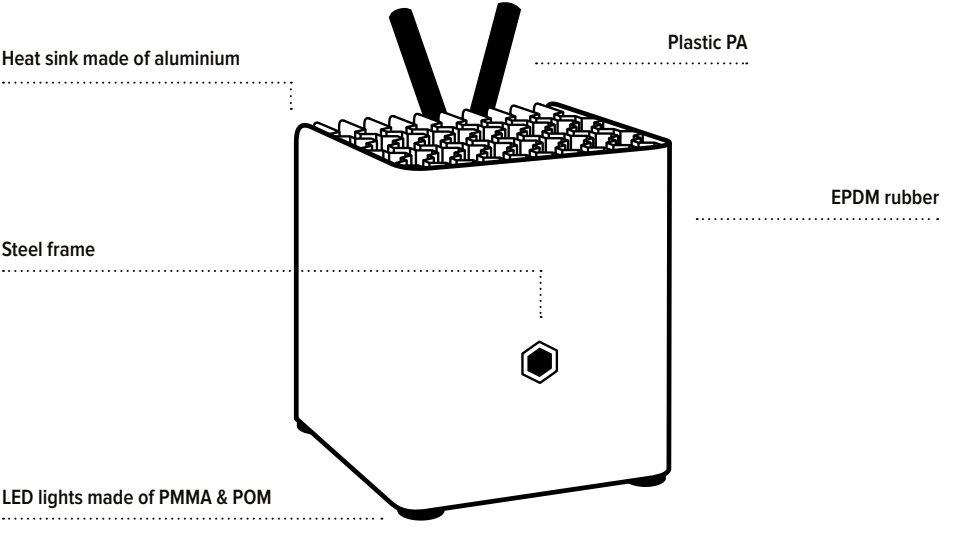

We chose to use steel for the frame of Protonet because it is the optimal material for mechanical stability, electrical shielding and heat conductivity. By using these types of materials we ensure that fewer resources are used in the production process and also a longer product life. We also attach great importance to easy recyclability, so no unsustainable varnish or glue is used. The surfaces of our personal servers are anodised and powder-coated.

PRODUCTION

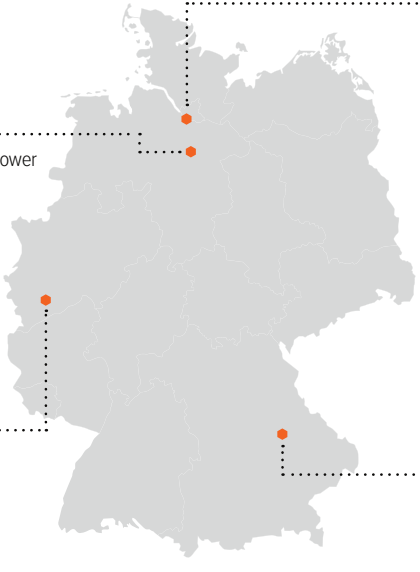

Hamburg

Protonet laboratory:
Smaller plastic components are produced with our 3D printer. The Protonet servers are assembled in our laboratory.

Geesthacht
Orange powder coat is applied here.

Seevetal

Plastic components such as the power button and LED lights.

Cologne

Heat conducting component.

Regensburg

The electrical board with the black power button and LEDs.

Compared to traditional processes such as injection moulding, stamping consumes less power, leading to a further reduction in resources used. Another important element is local production. Short delivery distances and personal relationships ensure optimum quality, as well as continual development with reduced response times. Protonet gets its orange-black appearance from our powder coater in Geesthacht, Hamburg.

EMISSIONS

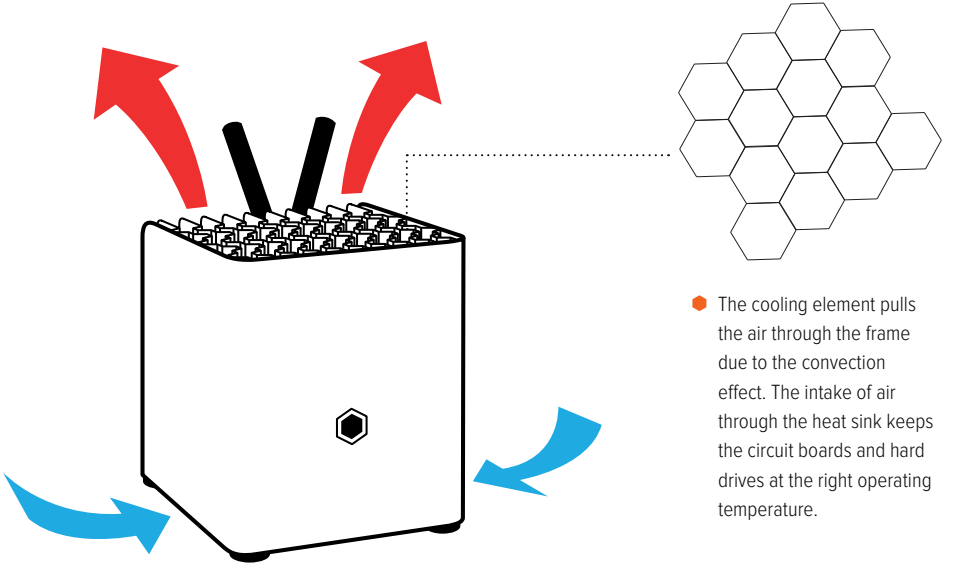

The cooling element pulls the air through the frame due to the convection effect. The intake of air through the heat sink keeps the circuit boards and hard drives at the right operating temperature.

As fans are often loud, wear out and require energy, we decided that the Protonet server would not use one. When deciding on the hardware, we considered components with minimal energy consumption. Nevertheless, residual energy still needs to be disposed of. Instead of a fan, we increased the size of the heat sink and placed it outside of the frame – it is actually the hexagonal mesh at the top of the frame.

PERFORMANCE

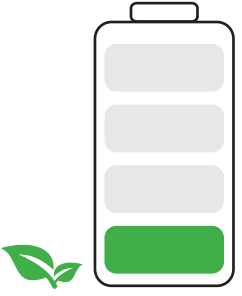

Minimal energy consumption

Interface Protonet SOUL OS

The interface of our personal servers **"Protonet SOUL OS"** requires a limited amount of resources. Nevertheless, we were still able to significantly increase the performance of the most recent version of Protonet. Even with additional features and upcoming apps, Protonet is now up to ten times faster. The processors that are installed are customised, leading to a considerably lower supply voltage compared to regular server processors.

ENERGY CONSUMPTION

25 - 28 Watts

- Normal operation with two hard drives

30 - 37 Watts

- Operation with four hard drives

70 - 90 Watts

- Depending on the configuration of your server

Even with advancements in technology, we still aim to reduce the combined energy and raw material use. A Protonet server requires approximately 25-37 Watts, which is less than a commercial light bulb. When powering your server please use the 19V / 120W power supply unit that is provided in the pack. If you have already owned a Protonet server in the past, please make sure you do not use the old Protonet 12V power supply units!

HARDWARE ADJUSTMENTS

Please be aware that any adjustments made to the hardware are at your own risk. We offer no support service in such cases. If any adjustments or changes are made to the hardware or frame, our guarantee and support services become void. Our operating software has been tested on our hardware configuration only and we therefore cannot guarantee optimal use of the software on any changed configuration.

PHYSICAL ENVIRONMENT

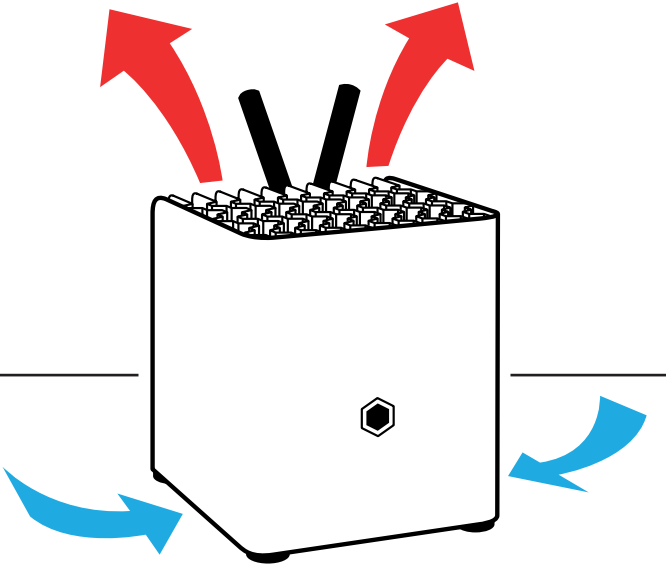

It is important to note that because of the passive cooling system the Protonet server should stand alone to permit continuous air flow. Furthermore, under no circumstances should it be covered, either partially or entirely! Protonet operates at its best when the top is uncovered. If your personal server is placed

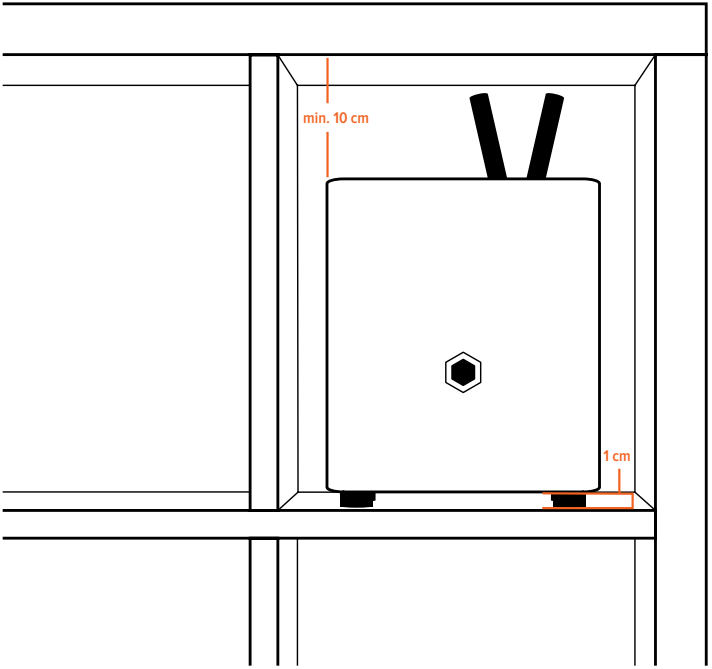

on a shelf, make sure it does not have a back wall or door in its close vicinity. Below the server there should be a minimum opening of 1 cm, and above a minimum distance of 10 cm. If the depth of the shelf is considerably deeper than the server the height gap needs to be greater as well. This ensures that there is no accumulation of air.

TO BE AVOIDED

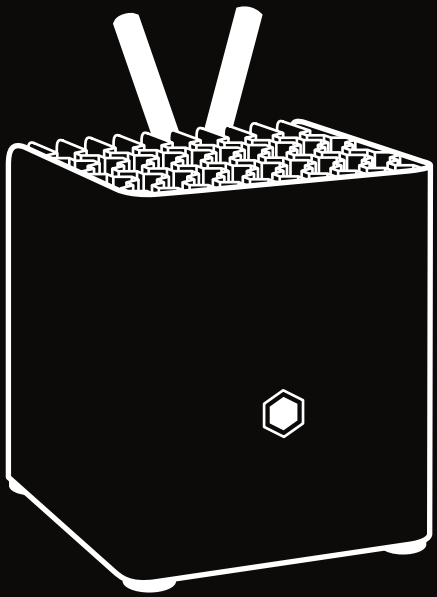

Direct sunlight and high temperatures (permissible operating temperature: room temperature 10-35°)

High levels of humidity (permissible humidity: 20-80%)

Unusual pressure conditions (atmospheric pressure: -15.0 up to max. 300m)

Warning! Protonet is not a toy. Please store your personal server out of reach of children and animals.

Hard drives have rotating discs with gyro stabilisation. This means that if the Protonet server experiences sudden movements or strong vibrations while it is operating, the hard drives may be damaged (acceptable shock while operating is 50g, and up to 200g while switched off).

BATTERY DISPOSAL

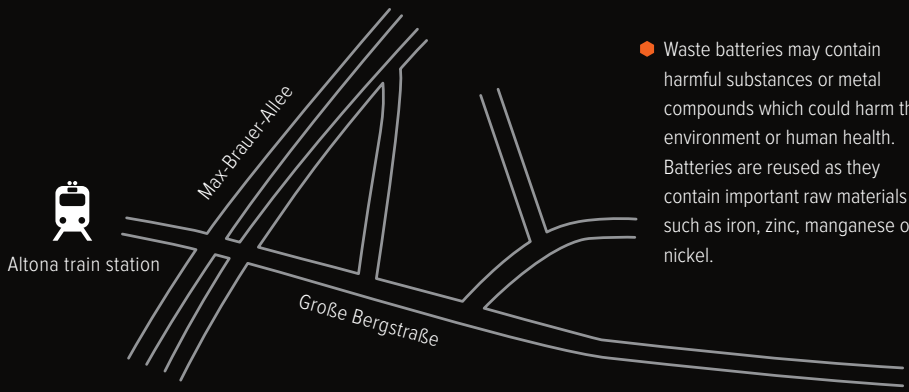

Waste batteries may contain harmful substances or metal compounds which could harm the environment or human health. Batteries are reused as they contain important raw materials such as iron, zinc, manganese or nickel.

Protonet GmbH
Große Bergstraße 160
22767 Hamburg
Germany

The server contains a 3V lithium battery (type CR 2032), which cannot be disposed of in domestic waste. Users are legally required to bring their waste batteries to a suitable collection point. We will dispose of waste batteries free of charge.

Protonet GmbH
Große Bergstraße 160
22767 Hamburg
Germany